(7,974)

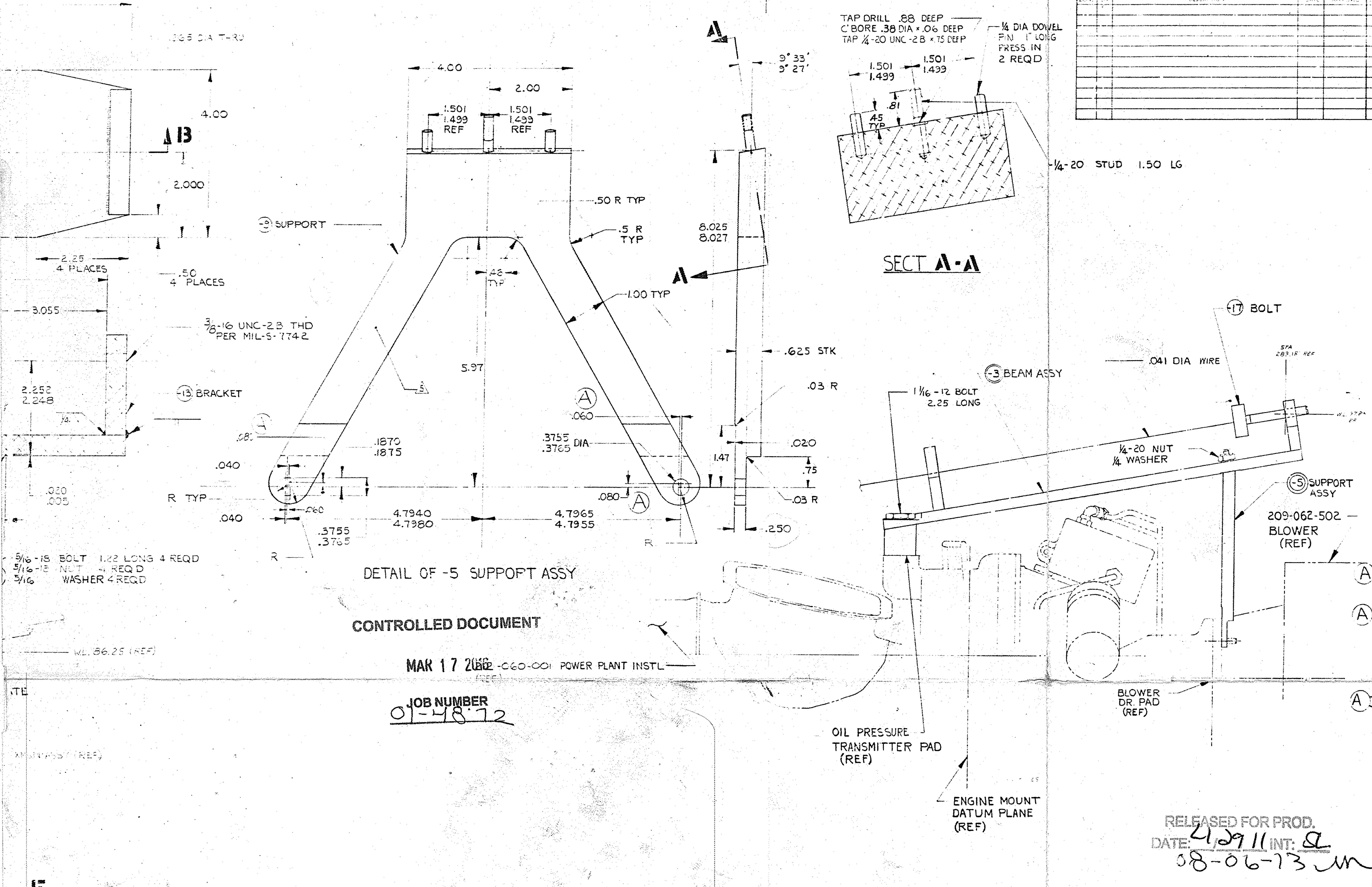

CONTROLLED DOCUMENT

MAR 17 2006

JOB NUMBER 01-48-72

RELEASED FOR PROD.
DATE: 4/29/11 INT: [illegible]
08-06-73

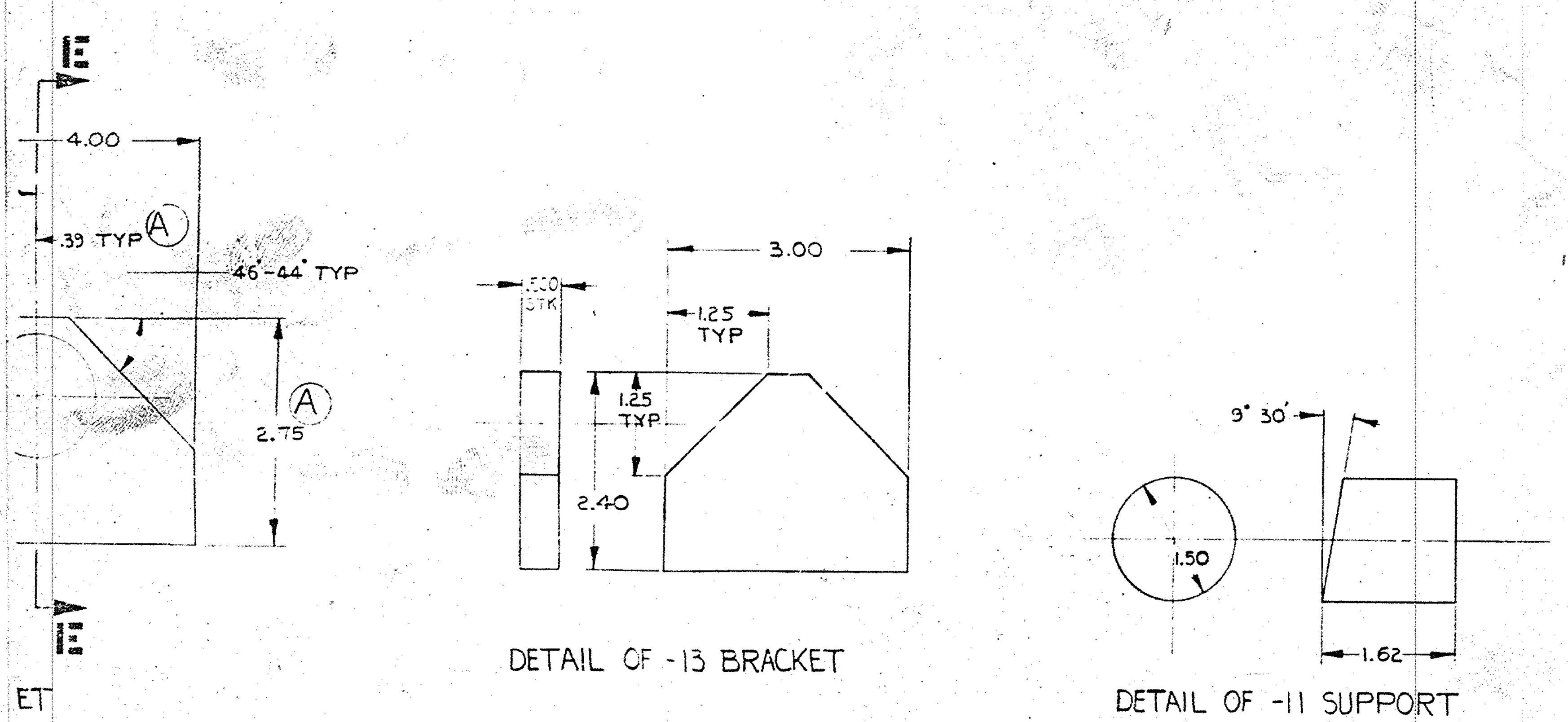

SHOP COPY

F 2

⑥ Per DWIF NOT For Navy use 6061

NOTES:

1. BREAK SHARP EDGES .015 R OR CHAMFER .015 ×45° EXCEPT AS NOTED.
2. MAT'L, SAE 4140, 4340 OR SAE 9310 STEEL
3. DIMENSIONS MUST BE MEASURED FROM ℄ AS DETERMINED BY .265 / .271 HOLE AND 3/8-16 THD P.D.
4. ALL WELDING PER BPS FW 4404, CLASS B. WELDING OPERATOR'S CERTIFICATION IS NOT REQUIRED
5. MARK PART NO. PER BPS FW 4050

Revisions			
LTR	DESCRIPTION	DATE	APPROVED
	FROM TEMP TO PROD DWG		
A	REF 1-25 E.O. 212 HES 108. SEE E.O. 212 BA 764	11/4/69	KEMP

-5	-3	QTY	PART OR IDENTIFYING NO.	NOMENCLATURE OR DESCRIPTION	STOCK SIZE	MATERIAL	MATERIAL SPEC.	TENSILE 1000 PSI OR COND	FINISH CODE		ZONE
		4	¼-20 SHCS 1.0 LG	mcmaster 92196A542							
		AR	.041 DIA	WIRE	(MS20995C41 STD)						
		4	5/16 PLAIN	WASHER	(NAS1197-516 STD)						
		1	¼ PLAIN	WASHER	(NAS1197-416 STD)						
		1	¼-20 PLAIN	NUT							
		1	1 1/16-12 ×2.25 LG	BOLT	(NAS551-12 STD)						
	1		¼-20 × 1.50 LG	STUD							
	2		¼ DIA × 1" LG	DOWEL PIN	(AN122721 STD)						
		4	5/16-18 PLAIN	NUT							
		4	5/16-18 × 1.22 LG	BOLT							
		1	T101579 -19	PLATE	.250×4.0×6.3	2024 AL ALY PL	COML TEMP T351	T351			A/6
		1	-17	BOLT	1½ DIA × 3.75	②		90/180	CC2		B/6
1			-15	BRACKET	.500×3.0×4.5	6061 AL ALY PL	COML	TEMP O			A/4
1			-13	BRACKET	.500×2.6×3.2	6061 AL ALY PL	COML	TEMP O			A/4
1			-11	SUPPORT	1½ DIA × 1.8	6061 AL ALY BAR	COML	TEMP O			A/3
1			-9	SUPPORT	.625×9.3×10.8	2024 AL ALY PL	COML TEMP T351	T351			D/4
	1		T101579 -7	BEAM	.500×4.0×21.0	6061 AL ALY PL	COML	TEMP O			C/5
		1	T101579-5	SUPPORT ASSY							C/3
		1	T101579-3	BEAM ASSY				T6	A		C/5
			T101579	ALIGNMENT TOOL							B/2

T101579 A

LAST SECTION LETTER USED E

LIST OF MATERIAL OR PARTS EWA 212 BA 9.5 W.O. 2796

212-900-001 212
212-900-002 UH-1N
209-900-004 AH-1J

BPS FW 4139

MACHINED SURFACES 125

DRAWN I.J. KEMP 9/24/69
STRESS N WARREN 10/29/69

BELL HELICOPTER COMPANY

TITLE ALIGNMENT TOOL - ENGINE TO XMSN, MODEL 212

DWG SIZE J6 CODE IDENT NO. 97499 DWG. NO. T101579

SCALE NOTED SHEET 1

T101579 DWG. NO. REV A SHT NO. 1

PROPRIETARY RIGHTS NOTICE

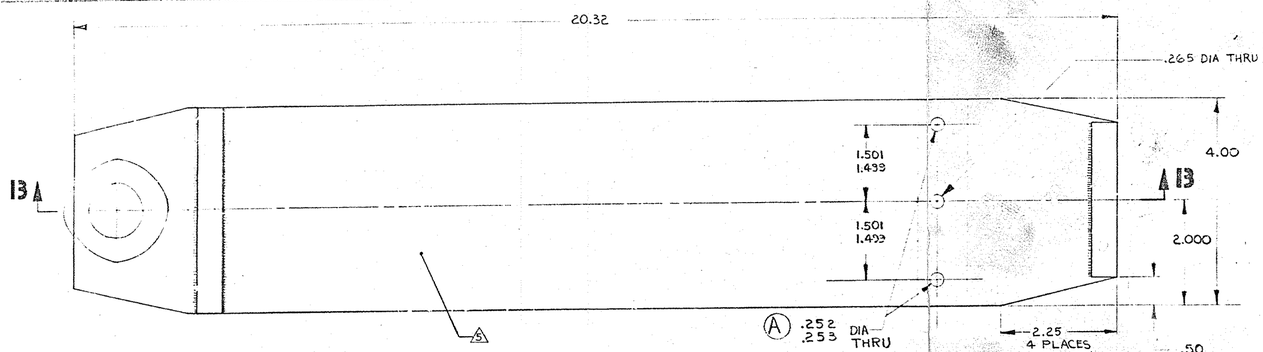

SECT. B-B

DETAIL OF -3 BEAM ASSY

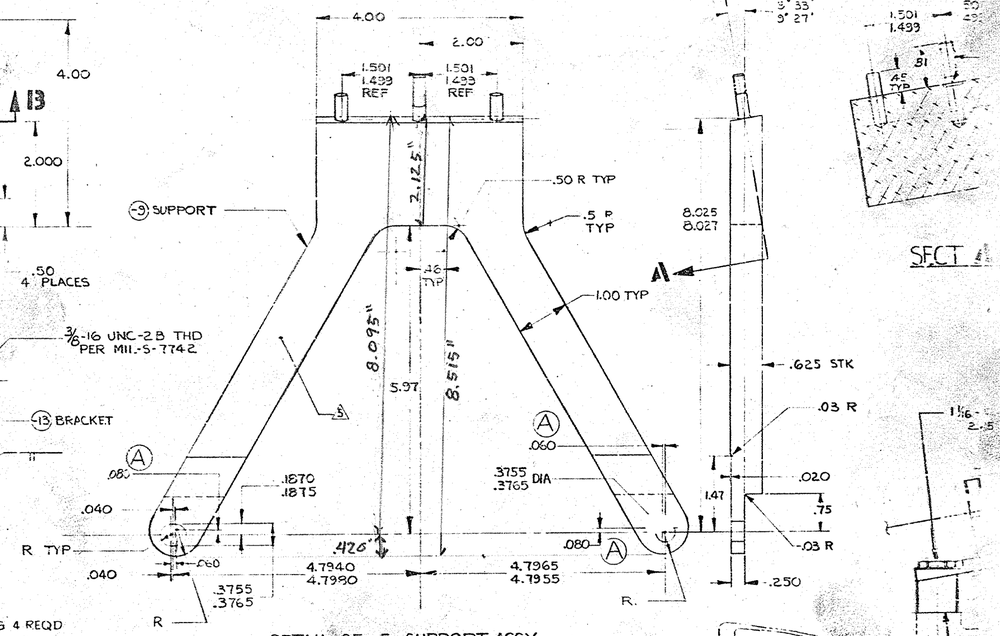

DETAIL OF -5 SUPPORT ASSY

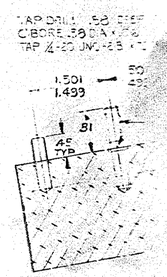

SECT A

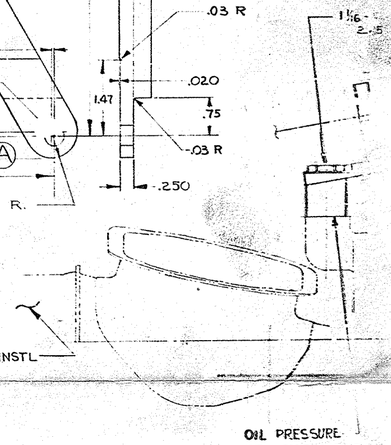

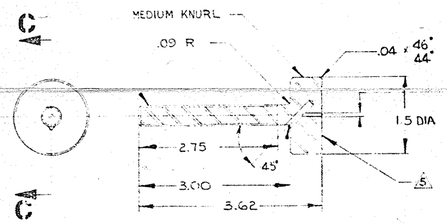

SECT. C-C

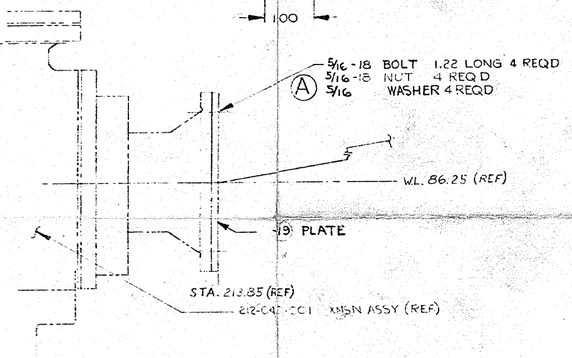

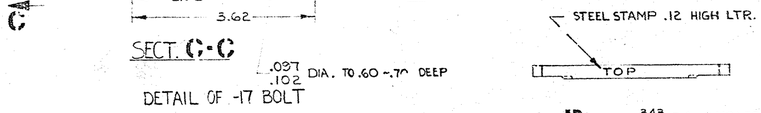

DETAIL OF -17 BOLT

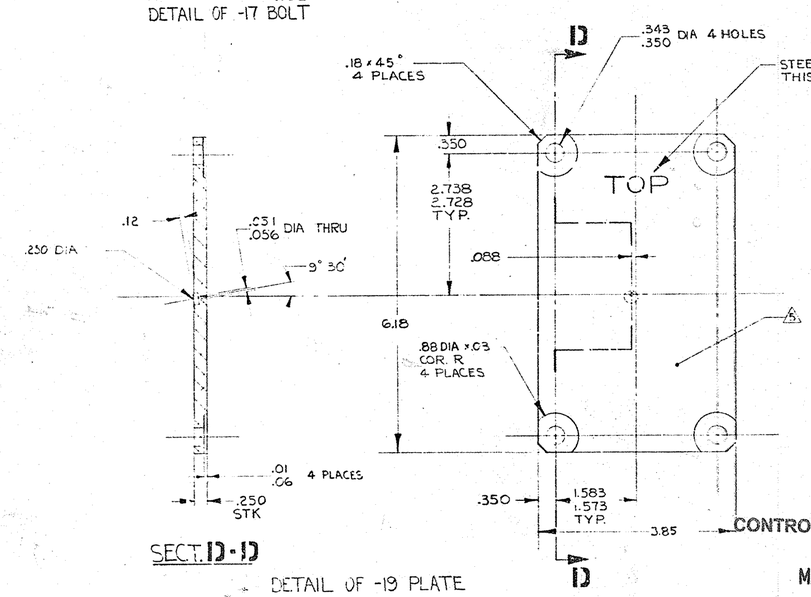

SECT. D-D

DETAIL OF -19 PLATE

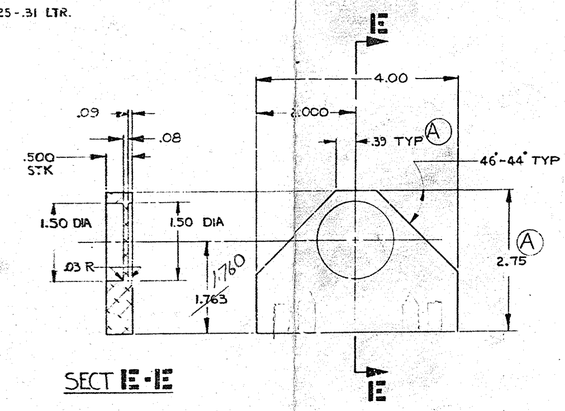

SECT E-E

DETAIL OF -15 BRACKET

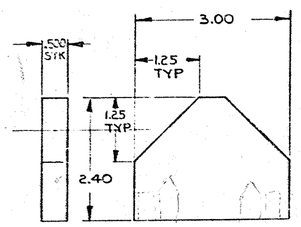

DETAIL OF -13 BRACKET

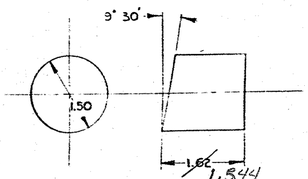

DETAIL OF -11 SUPPORT

A MARK PART
4. ALL
WELDING OF
5 DIMENSIONS
BY .265
6 MATL, SAE
7. BREAK
NOTES:

OIL PRESSURE
TRANSMITTER FA
(REF)

F 1

RELEASED FOR PROD.
DATE: 8/16/13 INT:

T101

CONTROLLED DOCUMENT

MAR 17 2016

JOB NUMBER

CONTROLLED DOCUMENT

MAR 17 2016

JOB NUMBER
01-4873

SHOP COPY

PROPRIETARY RIGHTS NOTICE

DATA RIGHTS AS BETWEEN BELL HELICOPTER COMPANY AND THIRD PARTIES IN ACCORDANCE WITH PARAGRAPH (1) BELOW.

DATA RIGHTS OF THE U. S. GOVERNMENT, OR THIRD PARTIES ASSERTING RIGHTS FROM THE U. S. GOVERNMENT, SHALL BE IN ACCORDANCE WITH THE APPROPRIATE PARAGRAPH (2) OR (3) BELOW WHICH CONTAINS A GOVERNMENT CONTRACT NUMBER.

(1) THIS DATA IS PROPRIETARY TO BELL HELICOPTER COMPANY, INC. REPRODUCTION, OR USE OF THIS DATA FOR ANY PURPOSE OR POSSESSION WITHOUT WRITTEN AUTHORIZATION FROM BELL HELICOPTER COMPANY.

(2) THIS DATA IS FURNISHED WITH UNLIMITED DATA RIGHTS TO THE U. S. GOVERNMENT IN ACCORDANCE WITH THE PROVISIONS OF CONTR...T NO. .....

(3) THIS TECHNICAL DATA, FURNISHED UNDER UNITED STATES GOVERNMENT CONTRACT NO. ..... SHALL NOT, WITHOUT THE WRITTEN PERMISSION OF BELL HELICOPTER COMPANY, ... EITHER (1) SOLD OR LICENSED IN WHOLE OR IN PART OUTSIDE THE GOVERNMENT, (2) USED IN WHOLE OR IN PART BY THE GOVERNMENT FOR MAKE OR HAVE MADE OR (3) USED BY A PARTY OTHER THAN THE GOVERNMENT, EXCEPT FOR:

(1) EMERGENCY REPAIR OR OVERHAUL BY OR ONLY BY OR FOR THE GOVERNMENT, WHERE THE ITEM OR PROCESS CONCERNED IS NOT READILY AVAILABLE TO MAKE OR REPAIR, AND WHERE THE PARTY PERFORMING SUCH REPAIR OR OVERHAUL HAS BEEN DISCLOSED NECESSARY DETAILS BY THE GOVERNMENT. SHALL BE HELD SUBJECT TO A PROPRIETARY RIGHTS NOTICE, SIMILAR, OR DISCLOSURE; OR

(2) RELEASE TO A FOREIGN GOVERNMENT, AS THE INTEREST OF THE UNITED STATES MAY WITHOUT, ONLY FOR INFORMATION OR EVALUATION WITHIN SUCH GOVERNMENT OR FOR EMERGENCY REPAIR OR OVERHAUL WORK BY OR FOR SUCH GOVERNMENT UNDER THE CONDITION OF (1) ABOVE. THIS LEGEND SHALL BE MARKED ON ANY REPRODUCTION HEREOF IN WHOLE OR IN PART.

SIZE	CAGE CODE	DWG NO.	REV
		T101579	1